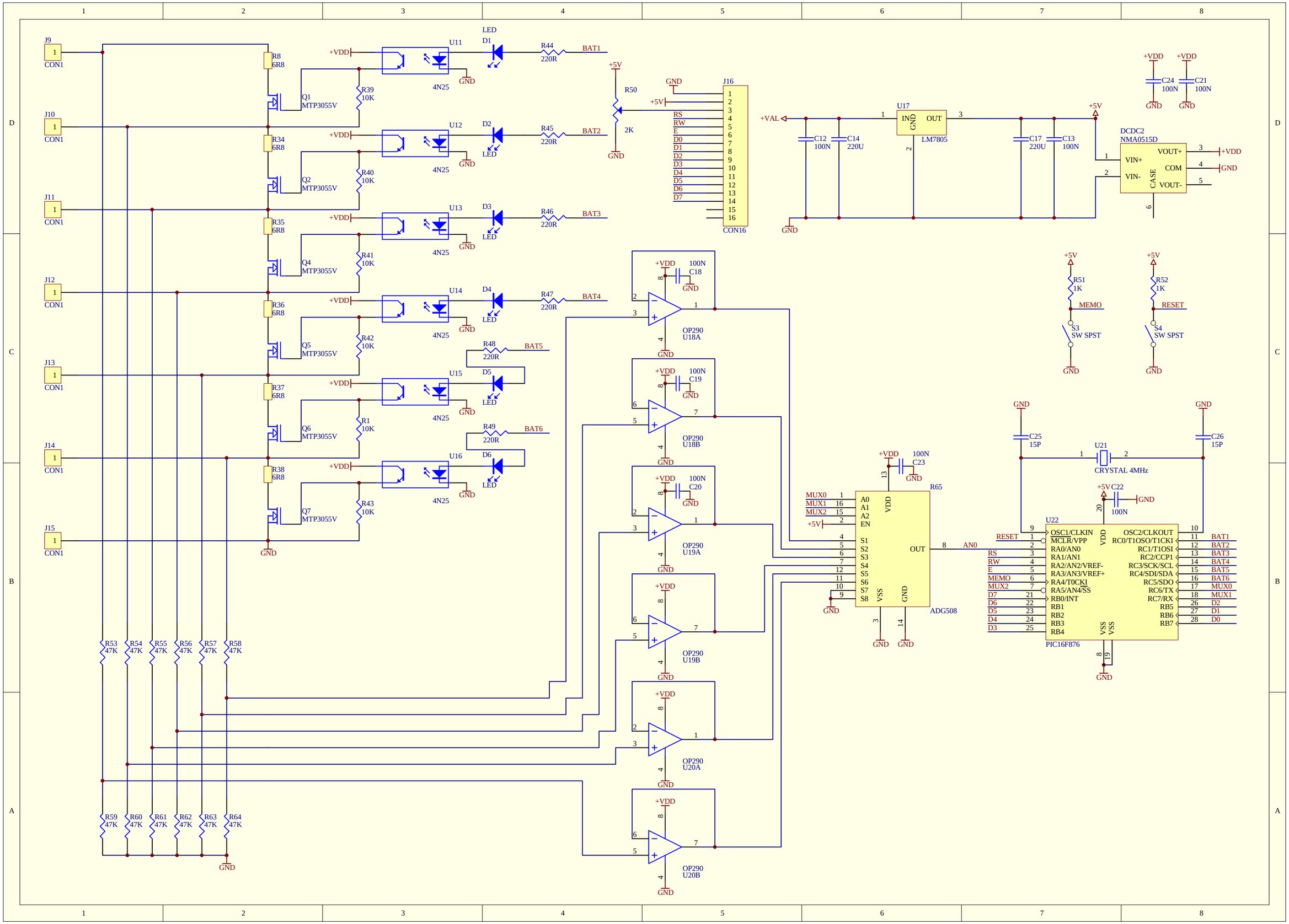
J9
J10
J11
J12
J13
J14
J15
CON1
R8 6R8
R34 6R8
R35 6R8
R36 6R8
R37 6R8
R38 6R8
Q1 MTP3055V
Q2 MTP3055V
Q4 MTP3055V
Q5 MTP3055V
Q6 MTP3055V
Q7 MTP3055V
R39 10K
R40 10K
R41 10K
R42 10K
R1 10K
R43 10K
+VDD
U11
U12
U13
U14
U15
U16
4N25
GND
LED
D1
D2
D3
D4
D5
D6
R44 220R
R45 220R
R46 220R
R47 220R
R48 220R
R49 220R
BAT1
BAT2
BAT3
BAT4
BAT5
BAT6
+5V
R50
2K
J16
CON16
RS
RW
E
D0
D1
D2
D3
D4
D5
D6
D7
+VAL
C12 100N
C14 220U
U17
IN
OUT
GND
LM7805
C17 220U
C13 100N
C24 100N
C21 100N
DCDC2
NMA0515D
VIN+
VIN-
VOUT+
COM
VOUT-
CASE
R51 1K
R52 1K
MEMO
RESET
S3 SW SPST
S4 SW SPST
OP290 U18A
OP290 U18B
OP290 U19A
OP290 U19B
OP290 U20A
OP290 U20B
100N C18
100N C19
100N C20
100N C23
R53 47K
R54 47K
R55 47K
R56 47K
R57 47K
R58 47K
R59 47K
R60 47K
R61 47K
R62 47K
R63 47K
R64 47K
R65
ADG508
MUX0
MUX1
MUX2
A0
A1
A2
EN
S1
S2
S3
S4
S5
S6
S7
S8
VDD
VSS
AN0
C25 15P
C26 15P
U21
CRYSTAL 4MHz
C22 100N
U22
PIC16F876
OSC1/CLKIN
MCLR/VPP
RA0/AN0
RA1/AN1
RA2/AN2/VREF-
RA3/AN3/VREF+
RA4/T0CKI
RA5/AN4/SS
RB0/INT
RB1
RB2
RB3
RB4
OSC2/CLKOUT
RC0/T1OSO/T1CKI
RC1/T1OSI
RC2/CCP1
RC3/SCK/SCL
RC4/SDI/SDA
RC5/SDO
RC6/TX
RC7/RX
RB5
RB6
RB7