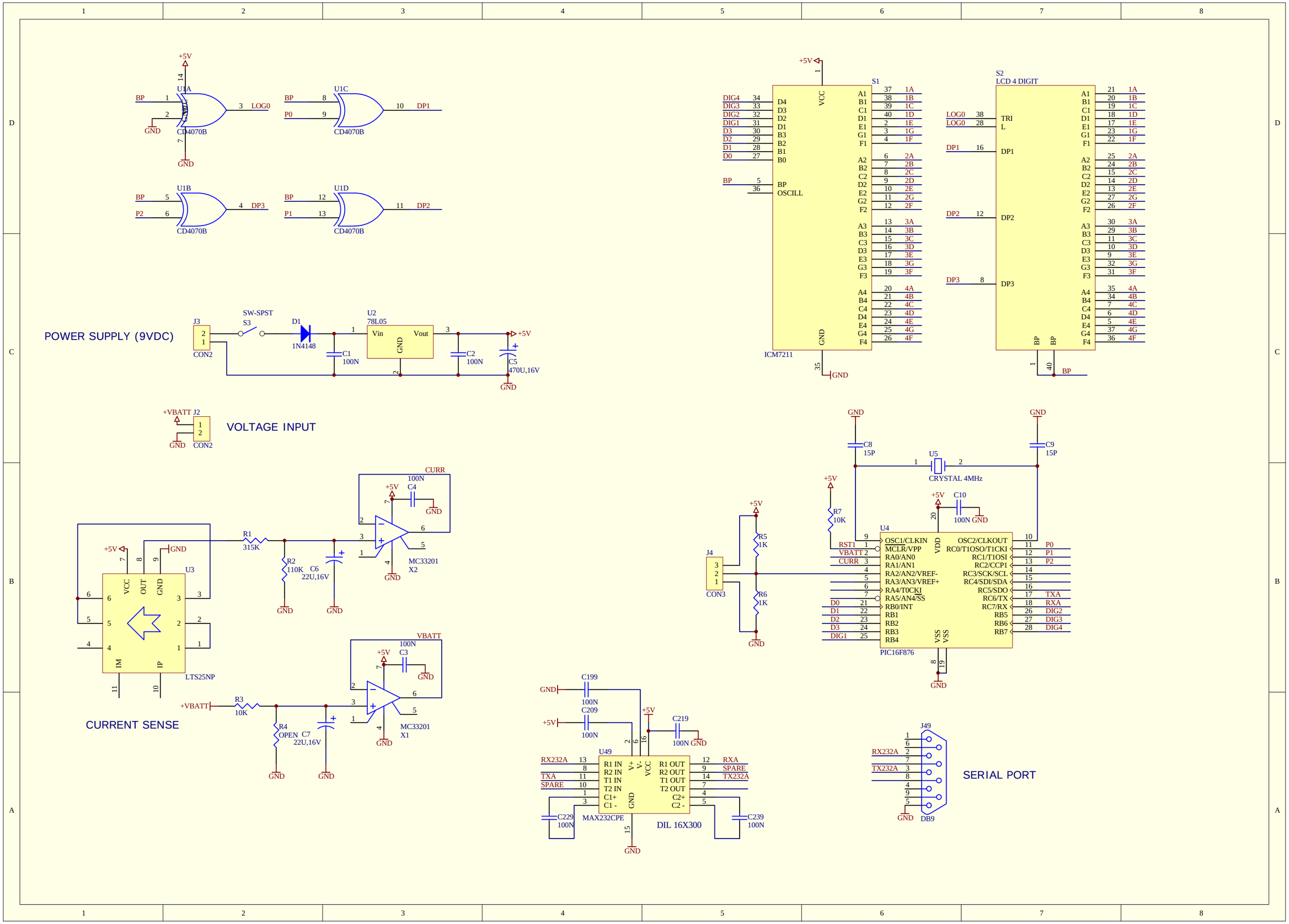
POWER SUPPLY (9VDC)
VOLTAGE INPUT
CURRENT SENSE
SERIAL PORT
U1A
U1B
U1C
U1D
CD4070B
LOG0
DP1
DP2
DP3
J3
CON2
SW-SPST
S3
D1
1N4148
U2
78L05
Vin
Vout
C1
100N
C2
100N
C5
470U,16V
+5V
GND
+VBATT J2
U3
LTS25NP
R1
315K
R2
110K
C6
22U,16V
R3
10K
R4
OPEN
C7
22U,16V
CURR
VBATT
C4
C3
MC33201
X2
X1
S1
ICM7211
S2
LCD 4 DIGIT
U4
PIC16F876
C8
15P
C9
15P
U5
CRYSTAL 4MHz
C10
100N
R7
10K
R5
1K
R6
1K
J4
CON3
C199
C209
C219
C229
C239
U49
MAX232CPE
DIL 16X300
J49
DB9